Sentry Buildings

Assembly Book

Revised February 27, 2024

the Richmond

16'x24' Building

Manufactured by RBS Holdings, LLC

205 Arlington Drive Greenville, PA 16125

This manual is copyrighted. Under the copyright laws, this manual may not be copied, in whole or in part, without consent from RBS Holdings, LLC © Copyright 2022

IMPORTANT INFORMATION ABOUT YOUR KIT

Building Permits: Check with your local HOA or building code office for any requirements, restrictions or permits necessary for construction.

Foundation: By owner. Refer to next page for foundation suggestions and size.

What's Included: Our package includes pre-cut materials for the 2nd floor roof gables, roof trusses and gable trim. The nails and hardware necessary to construct the lower walls are packed in the top of 'A' pallet. The other materials on the pallet will not be used until the first floor walls and loft floor are completed. This material is delivered, *curb side in covered van*, on two 4'x7' pallets. See back page for material list.

Framing lumber for the first floor walls and loft floor, exterior siding, loft flooring and roof sheathing will be delivered by a local supplier. This will be a separate delivery and you will be notified before that delivery takes place. Material is listed on the back pages. Someone will need to sign for both deliveries.

Owner Supplied: Framing lumber to frame-in the window and door openings. Roof shingles, metal roof edge, felt and ventilation accessories. See the back pages for quantity needed. Paint for siding and trim.

Assembly Help: Monday thru Friday 800-245-1577 8:00 to 5:00 ET

Weekend - after hours 724-866-4357

email to: *questions@barnkits.com* (normal business hours)

Care of product prior to assembly: Do no expose lumber and sheet goods to inclement weather. Assembly should begin promptly to prevent the twisting of lumber. Notify our company within 30 days of any damage or missing items for full replacement.

Building Tips: Follow the assembly Steps in sequence. Skipping steps will result in components not fitting properly. The nails, hardware and header material needed to assemble the lower walls and loft floor are packaged on the top of pallet 'A'. The other materials on the pallet will not be used until the first floor walls and loft floor are completed.

Tools Required:

- ❒ Hand or Circular Saw
- ❒ Cordless Drill
- ❒ Caulking Gun
- ❒ Level
- ❒ Measuring Tape
- ❒ 8' & 10' Ladder(s)
- ❒ Phillips Screwdriver
- ❒ Framing Square
- ❒ Hammer
- ❒ Safetyglasses: Always wear safety glasses when cutting or nailing!
- ❒ * Scaffolding

* You will need to rent (6) six sections of scaffolding to safely install the second floor material. Use safety harnesses when on the scaffolding. Consider hiring a professional roofer to install the shingles or metal roof. They have the knowledge and equipment to do the job properly.

Foundation Types & Measurements

Important: You will need to have a proper foundation installed to support the building. Depending on the intended use determines what type of foundation is best.

Do Not make the foundation larger than the building size. When installing the building on a concrete slab, install the siding flush with the bottom plate. When installing on a wood floor, extend the siding 3/4" below the bottom plate to cover the edge of the flooring.

Foundation Types: What foundation is best depends on what type of items will be stored. The building code in your area will also determine what type of foundation can be used. A few different types of foundations are shown below. Check the zoning and building code requirements in your area.

Foundations Types

Floating Slab A concrete slab is ideal for storage of cars or other types of heavy items.

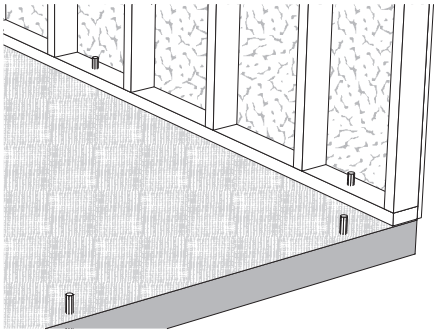

Floating Cement Slab

Wood Floor on Runners: Suitable for storage or workshop. Treated 6x6 lumber over a bed of gravel Floor joist should be treated 2x6 spaced 16" on center and covered with 3/4" tongue and groove wood flooring.

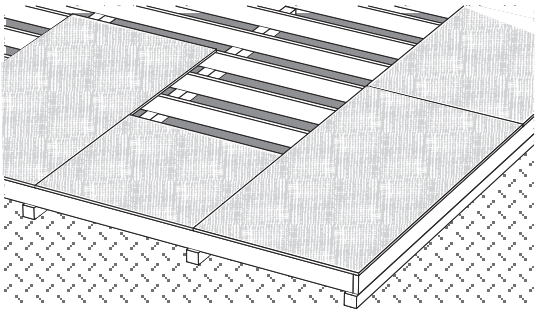

Wood Floor on Wood Runners

Exterior Siding Information

LP siding has a 50 year warranty and is already primed. Apply two coats of latex acrylic paint for the finish coat. Paint the bottom edge of the siding, *this is important*. Maintain 6" to 8" of clearance from the bottom edge of the siding and the ground. Don't allow garden mulch to build up and keep shrubs a minimum of 1' away from the building.

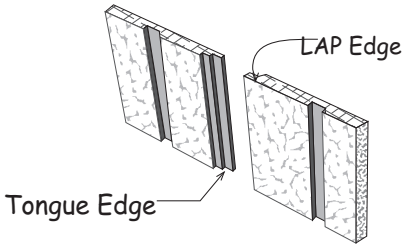

Supplemental Details

The Richmond doesn't include windows or doors which allows you to purchase the quantity, size and style to suit your needs.

When reviewing these assembly instructions you will need to plan for rough openings and modify wall framing as appropriate. Additional framing material may need to be purchased.

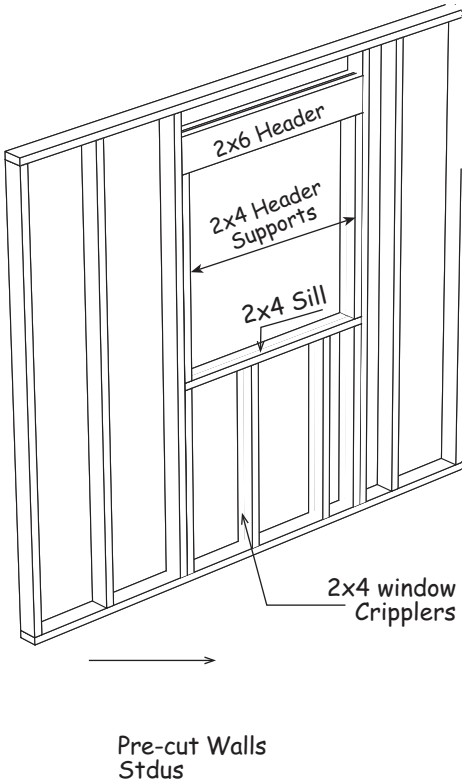

Window and Door Rough Openings

A rough opening requires a header, header supports and, in the case of windows, a sill. We have supplied (2) two 2x8-10' and 7/16" OSB for use as a header long enough to install a 72" wide patio door, not included. Header construction is shown below. A suggested location is explained in Step 5.

Details shows a typical window opening framed in a wall panel. Check the window and door manufacturer's instructions for the correct rough opening size.

Headers

Example header assembly for a 72" wide rough opening is shown below. This material is included. If a narrower opening is required cut to appropriate width before nailing. 2x6 and 2x10 boards can be used based on the width of the opening.

1. Locate (2) two 2x8 boards that are 10' long. Cut them 3" longer than the rough opening required for your door.
2. Locate a 24" x 48" OSB panel packed in our kit. Cut (2) two 7-1/4" wide fillers to fit between the 2x8 boards.
3. Take OSB filler and install in the center of the 2x8 boards. Nail together using 10d coated sinkers. Use (12) twelve nails spaced evenly on each side.

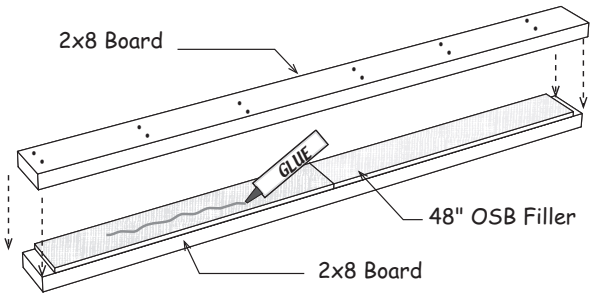

Step 1 Assemble (2) Two 92-1/2" Rear Wall Frames

1. Cut (2) two 2x4-8' (one will be treated) to a length of 92-1/2". Position the boards together and indicate with 'X' marks where the wall studs will be located.
2. Mark a 'C' anywhere between first two stud marks. This is referenced in a later step.

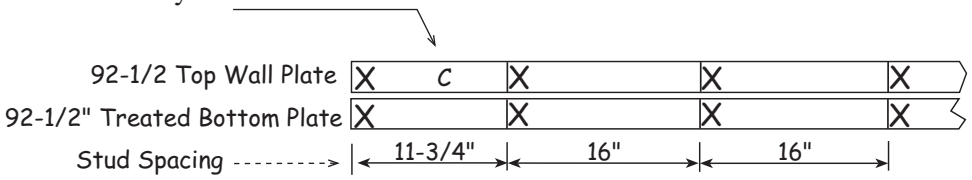

The length of pre-cut wall studs will vary from 92-1/4" to 93" depending on your locality.

Note: *When building the lower walls, use treated 2x4s for the bottom wall plates.*

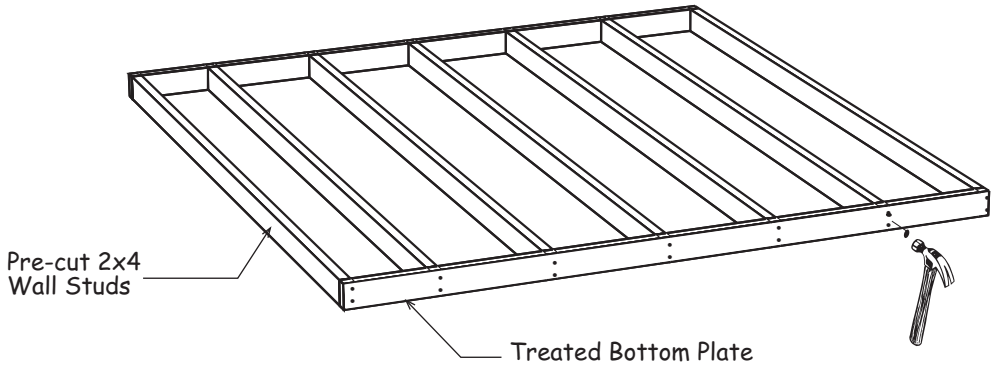

3. Install (7) seven pre-cut wall studs between the top and bottom plates. Nail the treated bottom plate to each wall stud with (2) two 16d galvanized deck nails. Use (2) two 10d coated sinker nails per stud to secure the top plate.
4. Repeat to build another 92-1/2' long wall frame.
5. Mark both frames '**Rear Wall Frames**' and set frames aside.

Step 2 Assemble (6) Six 8' Side Wall Frames

1. Select (2) two 2x4-8' (one will be treated) if necessary trim to a length of 96". Position the boards together and indicate with 'X' marks where the wall studs will be located.

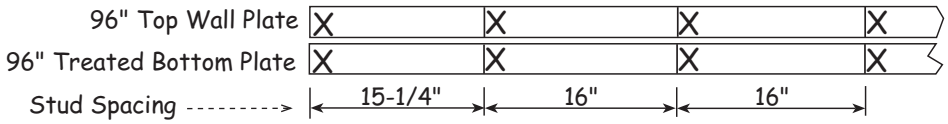

Add window or door rough opening(s) where necessary.

2. Install (7) seven pre-cut wall studs between the top and bottom plates. Nail the treated bottom plate to each wall stud with (2) two 16d galvanized deck nails. Use (2) two 10d coated sinker nails per stud to secure the top plate.
3. Repeat to build (5) five more 96" long wall frames.
4. Mark frames '**Side Wall Frames**' and set frames aside.

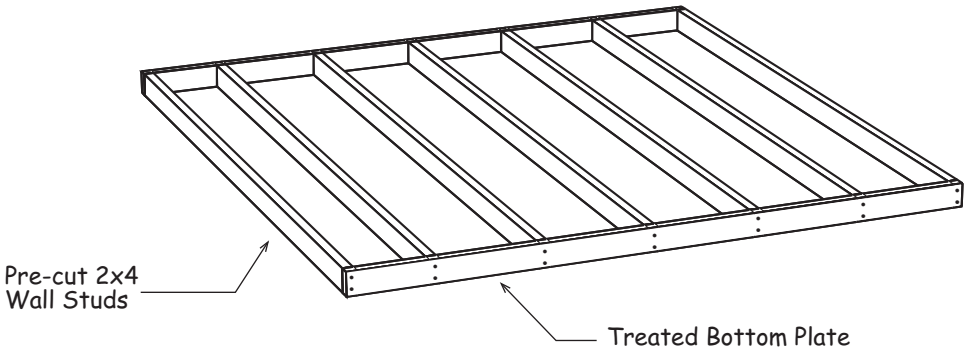

Step 3 Assemble 15'-5' Front Wall Door Frame

Add window or door rough opening(s) where necessary.

1. Cut (2) two 2x4-16' (one will be treated) to a length of 15'-5".
2. Assemble the front wall frame using the wall plates cut above and pre-cut wall studs. Use 16d galvanized deck nails for the bottom plate and 10d sinkers for the top plate. **Note:** The bottom treated 2x4 will be removed from the door opening after the walls are set. The 1-1/2" thickness must be subtracted from rough opening height provided by door manufacturer.
3. Calculate the rough opening height for the door you are installing; cut pre-cut studs to this length as header supports. Determine rough opening width and install header supports and pre-cut studs to top and bottom plates at the location of your choosing. Install the 2x8 header on top of header supports by toe-nailing the ends to the adjacent studs with 10d sinkers.
4. From a pre-cut stud cut (5) five 2x4 blocks to fit between the door header and top plate. Evenly space blocks using 10d sinkers toe-nailed into the door header and top plate.

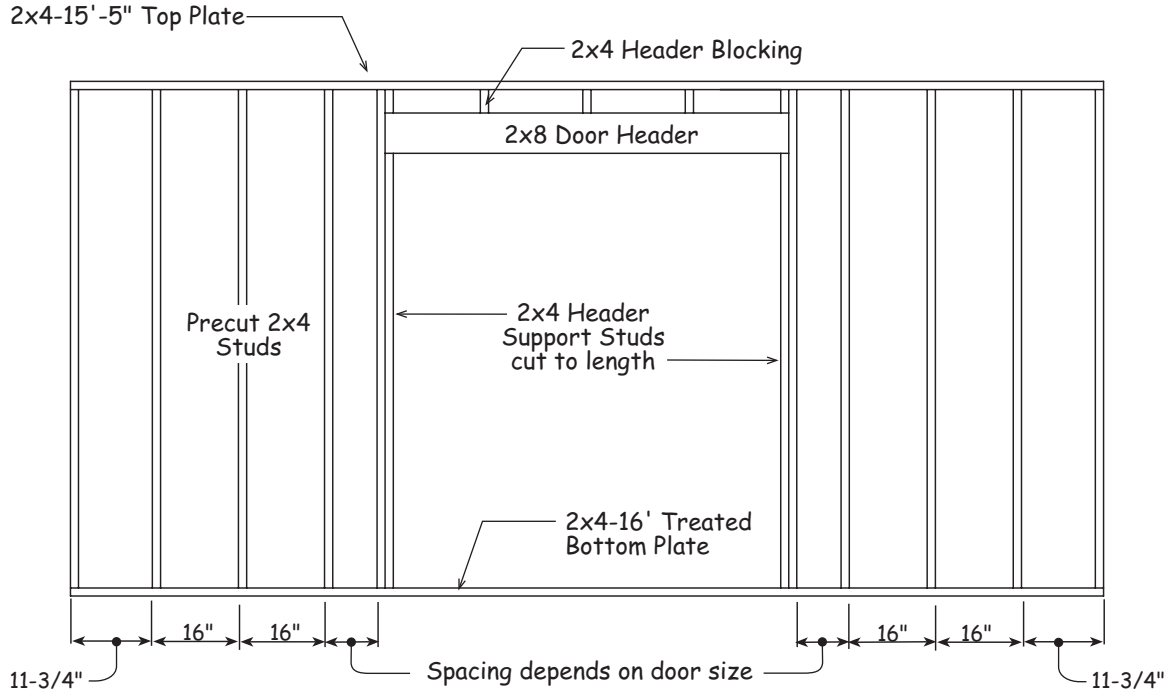

Example placement for a patio door shown. Location, style and size of door to be determined by owner. Refer to Supplemental Details on Page 3 for additional information.

Step 4 Install Wall Frames

Front and back wall frames are positioned between long side walls.

1. Install one of the 92-1/2" rear wall frames against inside of a 8' side wall frame. Brace walls with pre-cut studs. **IMPORTANT:** Orient end marked with a 'C' to corner. Secure frames together at the corner using (4) four 10d sinkers
2. Install the other 92-1/2" rear wall frame to the rear wall frame. Nail the rear wall frames together where they butt with (8) eight 10d sinker (stagger nails on each side of the studs).
3. Install another 8' frame, next to the first 8' side wall frame. Nail frames together where they butt with (8) eight 10d sinkers (stagger nails on each side of the studs).

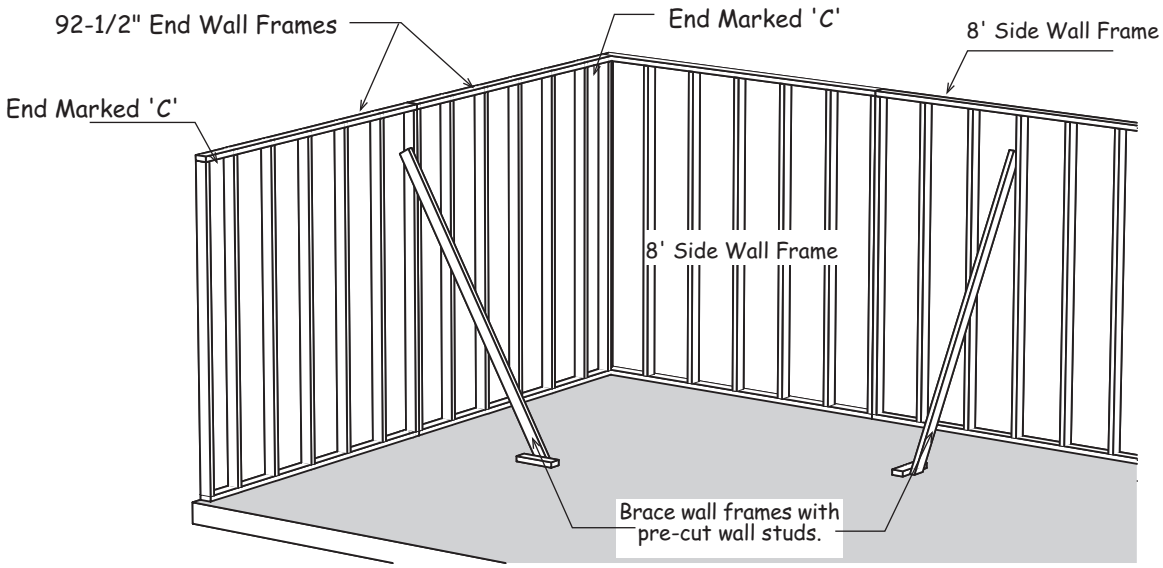

4. Nail frames to the floor using 16d Galv. spiral nails or, if erecting on a cement slab, concrete anchor bolts (*not included*) spaced 24" on center.

Step 5 Install Wall Frames continued

5. Install the remaining 8' long side wall frames.
6. Install the 15'-5" front wall frame. Secure to side walls with 10d sinkers.
7. Secure the frames together at the corner using (4) four 10d sinkers. Nail frames to the floor using 16d coated sinker nails (or concrete anchor bolts, *not included*) 24" on center. Do not nail in door opening.

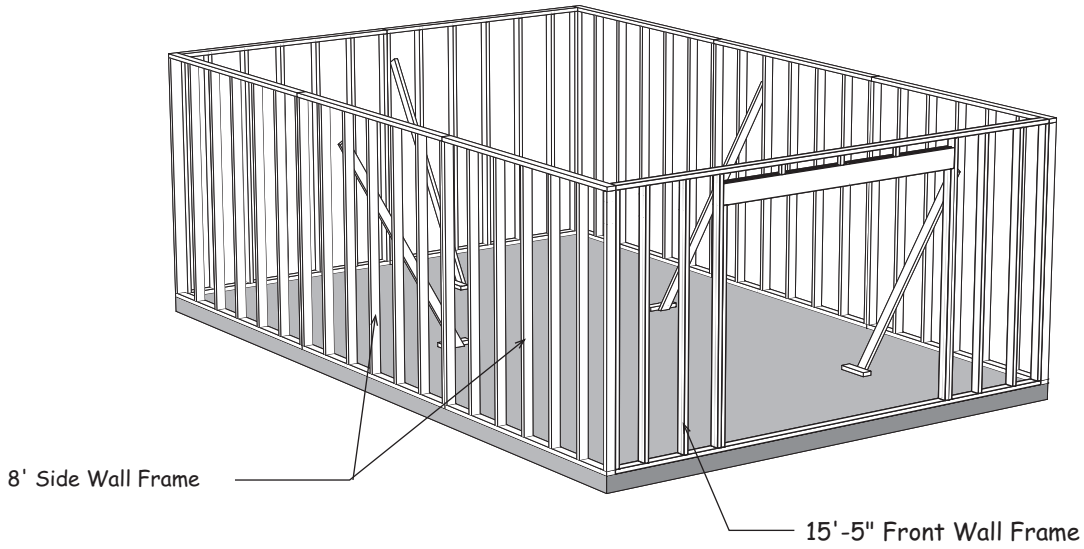

Step 6 Install 2x4 Tie Plates

1. Install a 16' long 2x4 on the back wall. Use 10d sinkers space 16" apart to secure tie plates.
2. Repeat to install a 16' long 2x4 tie plate on the opposite front wall.

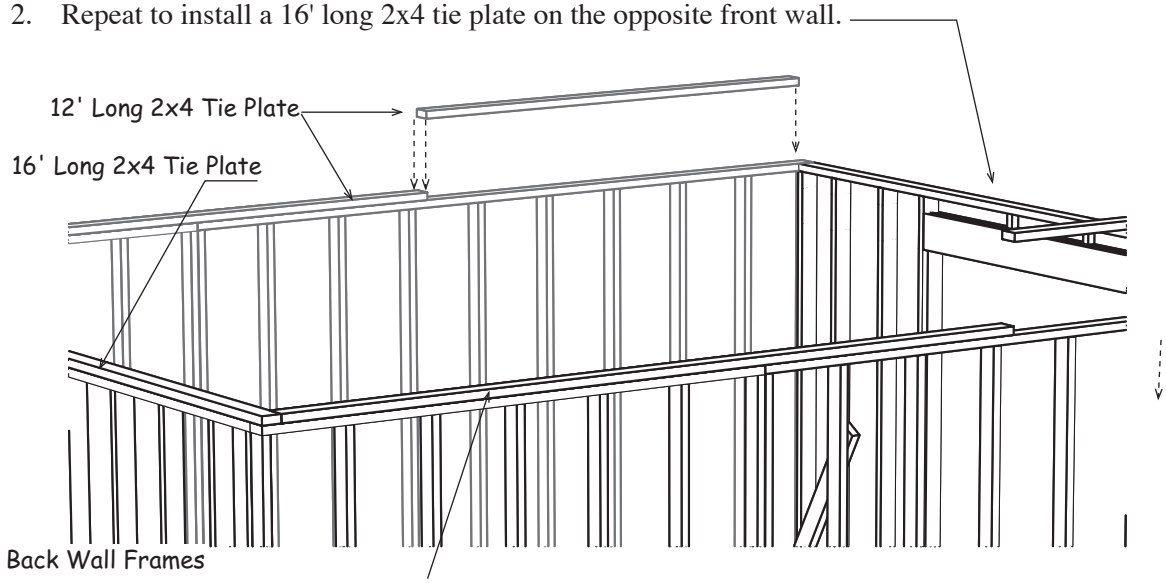

3. Install a 2x4-12' board on the side wall frame. The 2x4 side wall tie plate will butt against the 16' long tie plate on the back wall. Use 10d sinkers.
4. Cut to fit and install a 2x4-12' board on the same side wall frame.
5. Repeat to install 2x4 tie plates on the opposite side wall frames.

Step 7 Install Siding on Wall Frames

If a siding panel has a damaged edge, install this edge at a corner where it will be covered with corner trim.

Concrete Slab Foundation: Install siding flush with the bottom plate.

Wood Floor Foundation: Extend the siding 3/4" below the bottom plate.

Exterior Siding Information

LP siding has a 50 year warranty and is already primed. Apply two coats of latex acrylic paint for the finish coat. Paint the bottom edge of the siding, *this is important*. Maintain 6" to 8" of clearance from the bottom edge of the siding and the ground. Don't allow garden mulch to build up and keep shrubs a minimum of 1' away from the building.

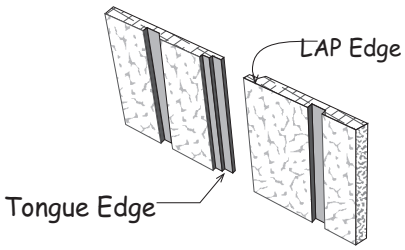

Step 7 Install Siding on Wall Frames continued

1. Install a full width siding panel on the side wall with the 'LAP' edge flush with the 2x4s on the back wall. Install (5) five more siding panels. If necessary cut last panel flush with 2x4s on front wall. Use 8d galv. box nails spaced 8" apart.
2. Install a siding panel on the back wall with the 'LAP' edge flush with the siding on the side wall. Install 3 more panels.
3. Install siding on opposite side wall.

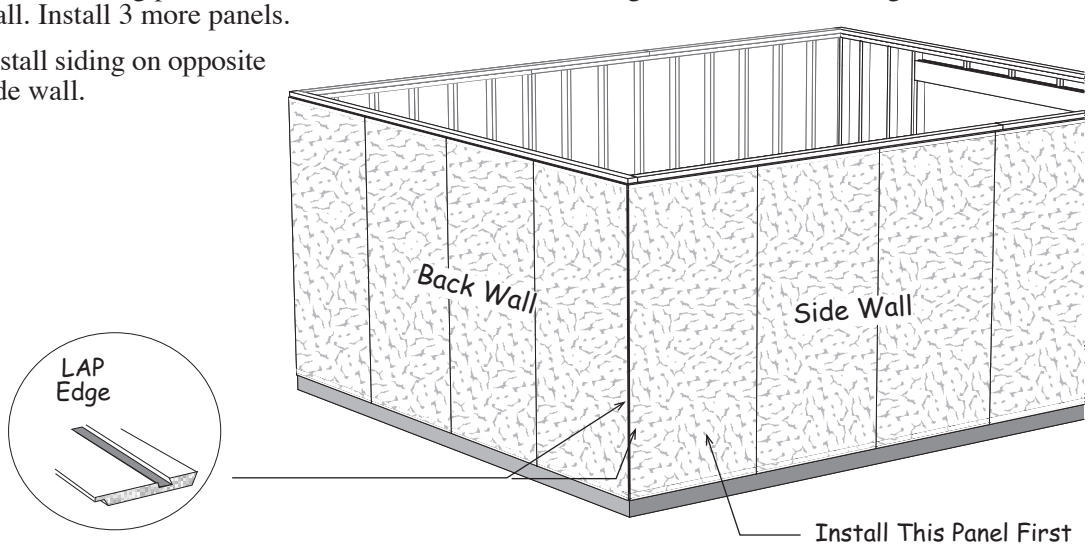

Step 8 Install Siding on Front Wall

1. Install a full width siding panel on the front wall with the 'LAP' edge flush with the siding on the side wall.
2. Install (2) two 4x8 siding panels. Cut and remove the siding that extends over the door opening. Cut siding flush with bottom of door header and door side.
3. Install another full width panel on the right side of the door opening.
4. Cut and remove 2x4 plate that extends across the door opening. Save the 2x4, it will be used in a later step.

Example placement for a patio door shown.

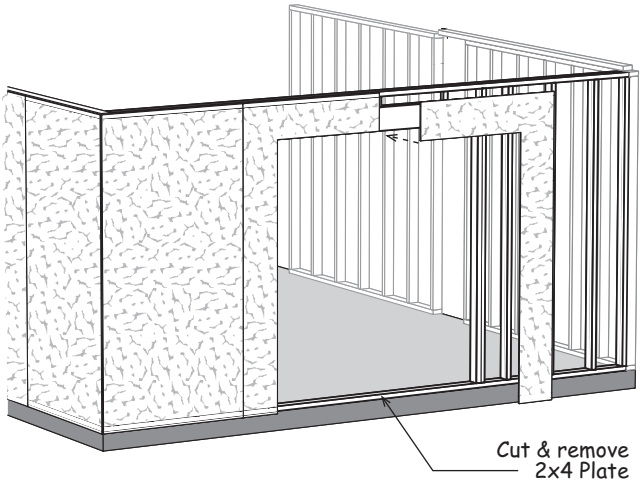

Step 9 Install 2x10 Joist Headers

IMPORTANT: If you purchased the optional stair kit, <u>go now</u> to the instructions in the stair kit book to install the stairs, floor joist and flooring. Otherwise, modify the instructions on Step 11 to provide another way to access to the loft area.

1. Cut a 8' long 2x10 board to 92-1/2". Install this 2x10 to the 8' wall panel, against the 16' end wall panel. Install the 2x10 flush with the top of the tie 2x4 tie plate. Secure with (2) two rows of 10d sinker nails spaced 4" apart across the top 2x4 plates. Nail the 2x10 to each wall stud with one 10d sinker. *See detail below.*

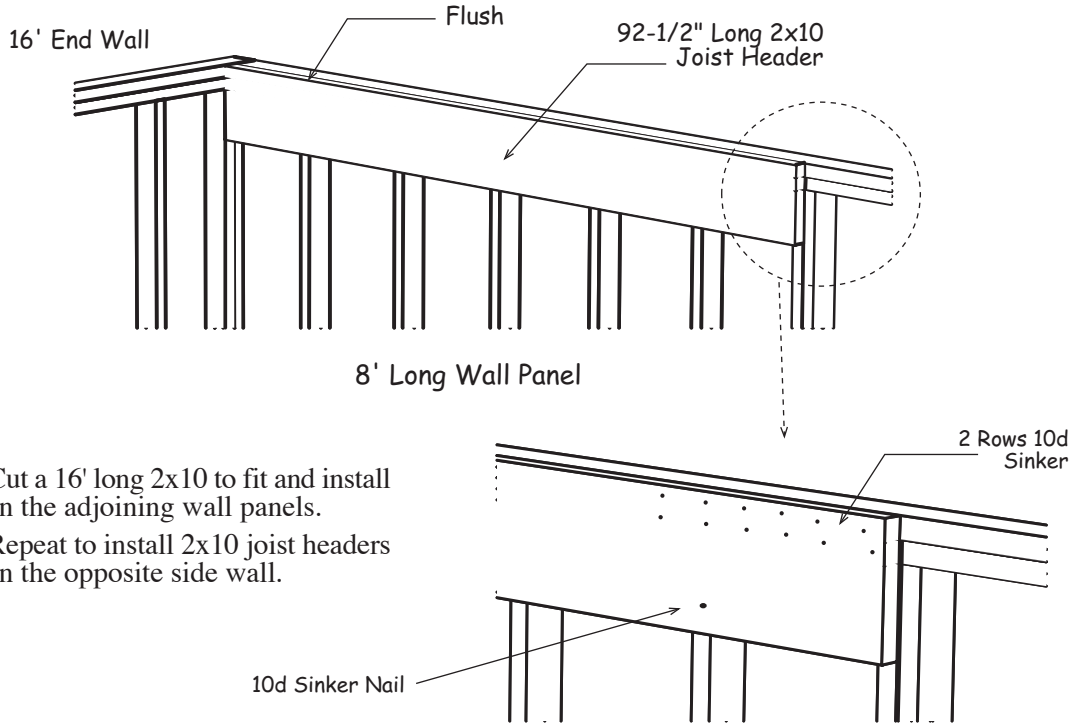

2. Cut a 16' long 2x10 to fit and install on the adjoining wall panels.
3. Repeat to install 2x10 joist headers on the opposite side wall.

Step 10 Install 2x10 Joist Hangers

Install metal joist hangers on the 2x10 joist header, directly above each wall stud. Where the wall panels butt together install the hanger in the center of the wall studs. Install the hanger flush with the bottom of the 2x10 so the top of the floor joist will be flush wit the top of the 2x10. Install hangers with 1-1/2" hanger nails.

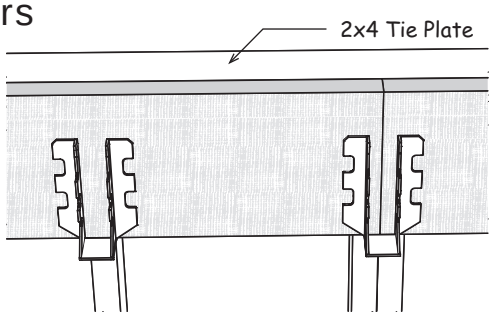

Step 11 Install Floor Joist

Cut 2x10-16' boards to 182" length and install between the side walls. Secure to joist hanger with 1-1/2" hanger nails.

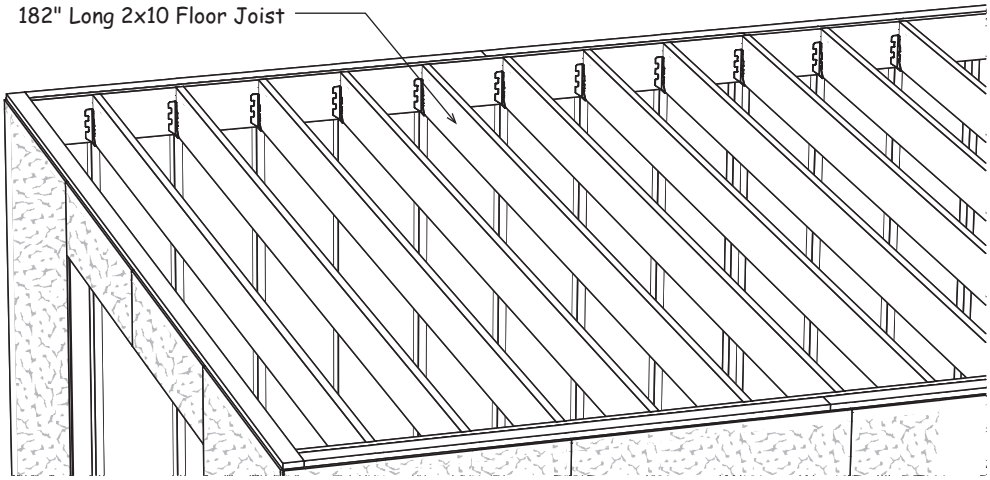

Step 12 Install Loft Flooring

Starting at the front (door wall) install 3/4" T&G flooring with the 'Tongue' edge flush with the 2x4 tie plates on side walls. Stagger the seams in an alternating pattern (see below). Continue to back wall. Secure flooring with 8d galvanized spiral deck nails spaced 12" apart.

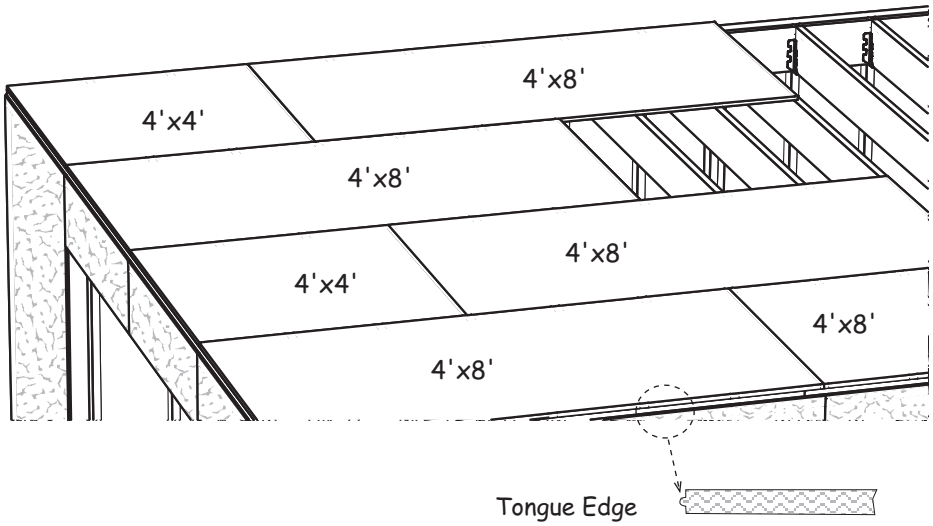

Step 13A Assemble Rear Gable

Assemble the roof gables and trusses on the center of the loft floor. This will make it easier to stand the gable upright over the lower wall.

1. Cut (2) two 2x4-10' boards to a length of 97-1/2". Position these 2x4s, *on edge* and butt together.
2. Position (2) two 81-3/4" long 2x6s and (2) two 71-3/8" long 2x6 boards on the 2x4 plates as shown below. The top 2x6 boards have blue marks on the ends. Position these ends together at the top.

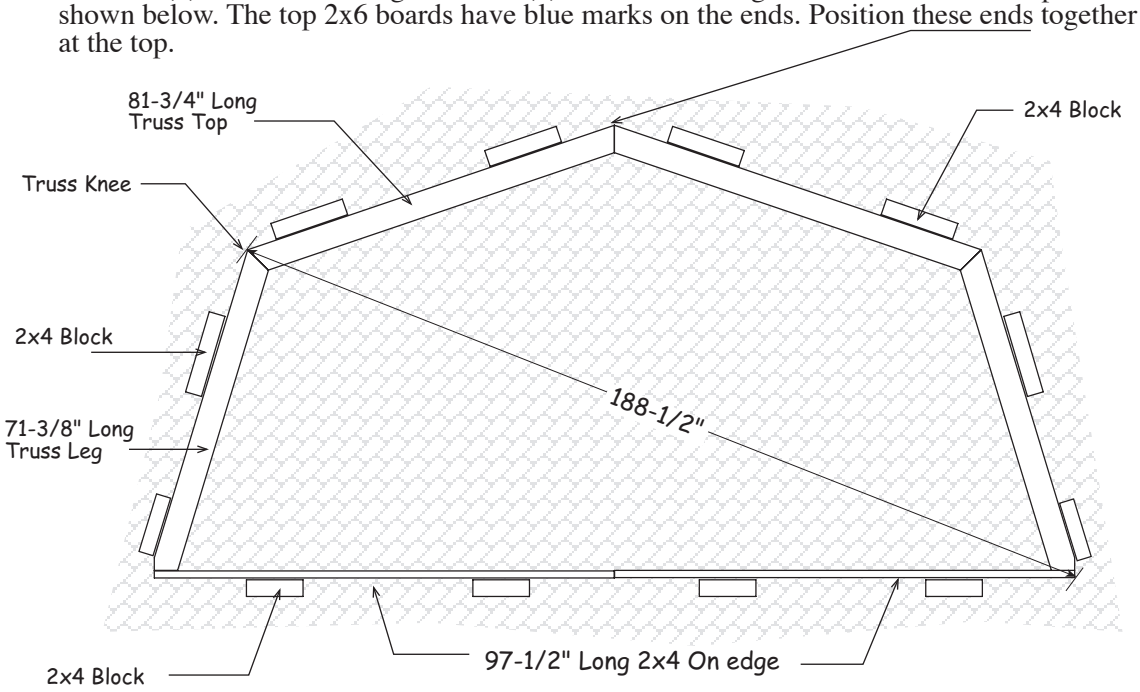

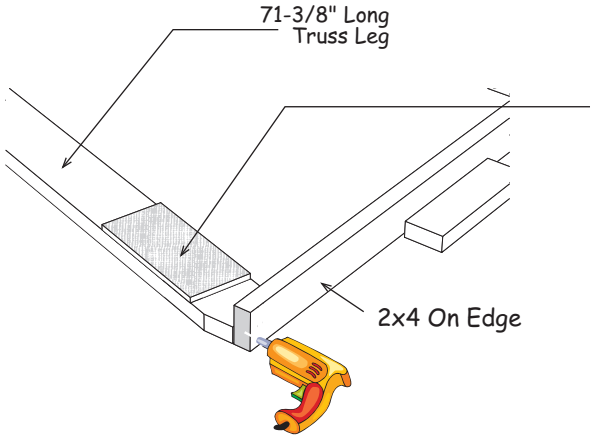

3. Secure the truss leg to the 2x4 plate with (2) two 2-1/2" long deck screws.
4. Install 5-1/2" x 12" OSB fillers on the 2x6 truss legs near 2x4 with 6d common nails. Exact spacing isn't important.
5. Square truss. Measure diagonally from the knee of the 2x6 truss to the bottom corner of the 2x4 plate. The measurements will be the same (188-1/2") when the truss is square.
6. Cut 2x4 removed from door opening into 8" long blocks. Tack nail or screw the blocks around the perimeter of the gable frame to prevent the gable from moving.

Step 13B Assemble Rear Gable continued

The Ridge Gussets have equal length angle cuts. The Knee Gussets have unequal length cuts.

1. Secure the 2x6 boards together at the knee and ridge with 1/2" OSB gussets. Use 6d common nails. Nail 5-1/4" x 12" OSB fillers where shown below.

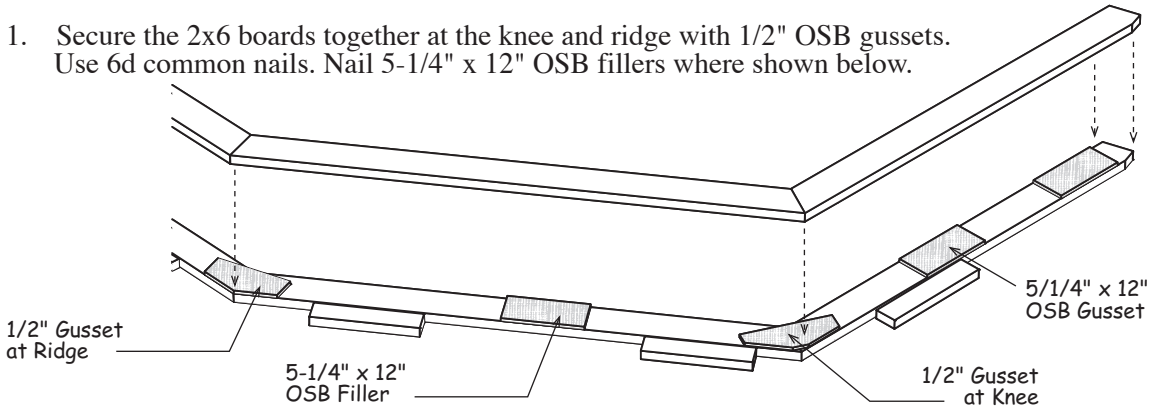

2. Place (2) two 81-3/4" and (2) two 71-3/8" 2x6s over the fillers. Secure using (6) six 10d sinkers where fillers and gussets are located.
3. Install a 21-3/4" high pre-built gable frame at the peak of the double row of trusses. Secure the frame to the 2x6 truss boards with (6) six 2-1/2" deck screws.
4. Position a 19-1/4" pre-built frame directly below the top frame. Use (2) two 80-1/2" long studs to help align the upper and lower frames. Use a framing square to ensure the studs are plumb. Screw bottom frame to 2x4 plate using 2-1/2" screws. Secure the 80-1/2" studs to the pre-built frames using 2-1/2" screws.

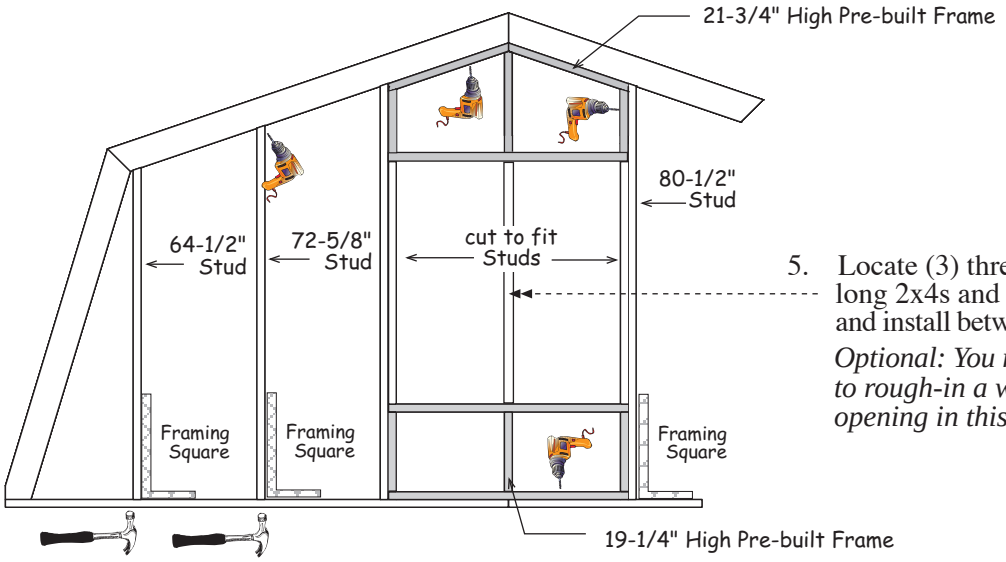

5. Locate (3) three 47-3/4" long 2x4s and trim to fit and install between frames.

   Optional: You may choose to rough-in a window opening in this area.

6. Install a 72-5/8" and a 64-1/2" wall stud on the left side of the gable frame. Use a square to ensure the studs are plumb. Nail to 2x4 bottom plate with 10d sinkers and screw to 2x6s with 2-1/2" screws. Repeat to install studs on right side of gable frame.

Step 14 Install Siding on Rear Gable Frame

1. Stand up the gable frame and slide it to the rear of the building. Position the frame with the bottom towards the rear wall so it can be erected after the siding is applied.
2 Install a pre-cut siding panel with the 'cut edge' flush with the left side of the gable frame. The siding should extend 3/4" below the bottom 2x4 gable plate. Install siding with 8d galv. nails.
3 Install (2) two 4x8 siding panels. Cut and remove siding that extends above the top of the gable frame.
4. Install 80-1/2" long siding panel. Cut the siding that extends beyond the gable fame.

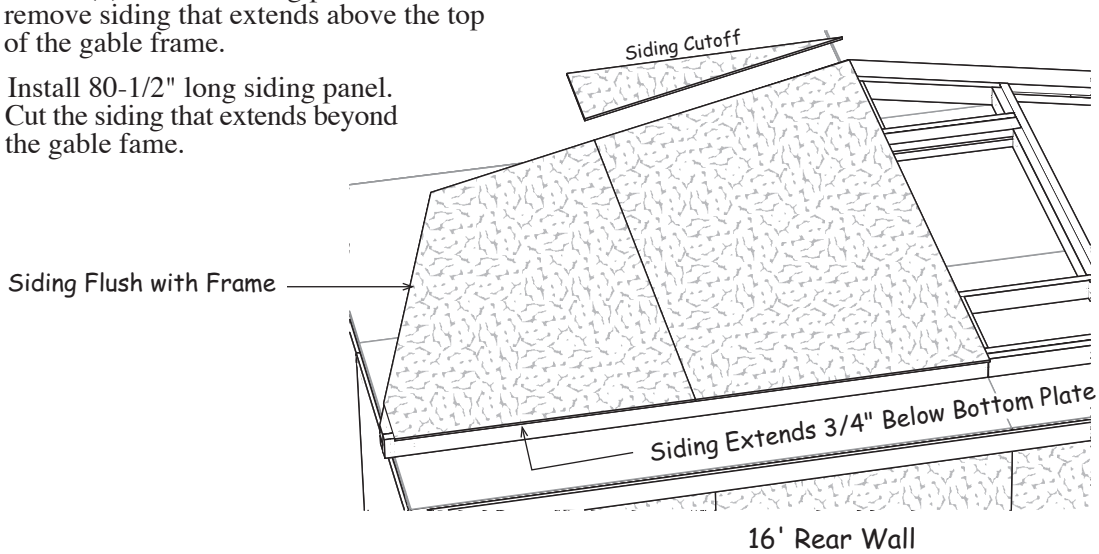

Step 15 Install Trim on Front and Back Walls

IMPORTANT: Trim Must Be Installed Before Installing Roof Gables!

All trim is installed using 8d galvanized box nails spaced 12" apart.

1. Locate (4) four 1-1/2" x 48-3/4" siding filler strips. Install these on back wall flush with top of flooring. There may be a gap between top of siding and strips. Use a few 8d galv. nails. Additional nails are applied below.
2. Cut and install (2) two 1x4 -10' trim boards flush with top of floor and bottom of the siding. Install trim flush with the siding on the side walls. Use 8d galv. nails spaced 12" apart.
3. Install (2) two 96" long 1x4 trim boards between corner boards. Trim should be flush with the loft floor. Cut 2nd board to fit.
4. Repeat to install trim to the front wall panel.

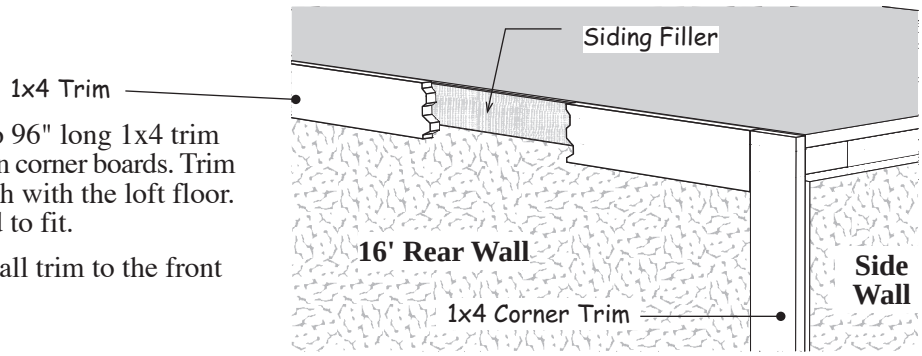

Step 16 Install Rear Roof Gable

1. Install (2) two 2x4-12' boards on the back wall to prevent the gable from falling off during gable installation. Install (2) two more 2x4-12 boards to brace the vertical 2x4 in place.

   Before bracing the vertical 2x4s in place attach (2) two 2x4 blocks to the back of the 2x4s. This will create the proper spacing to set the gable over the lower wall.

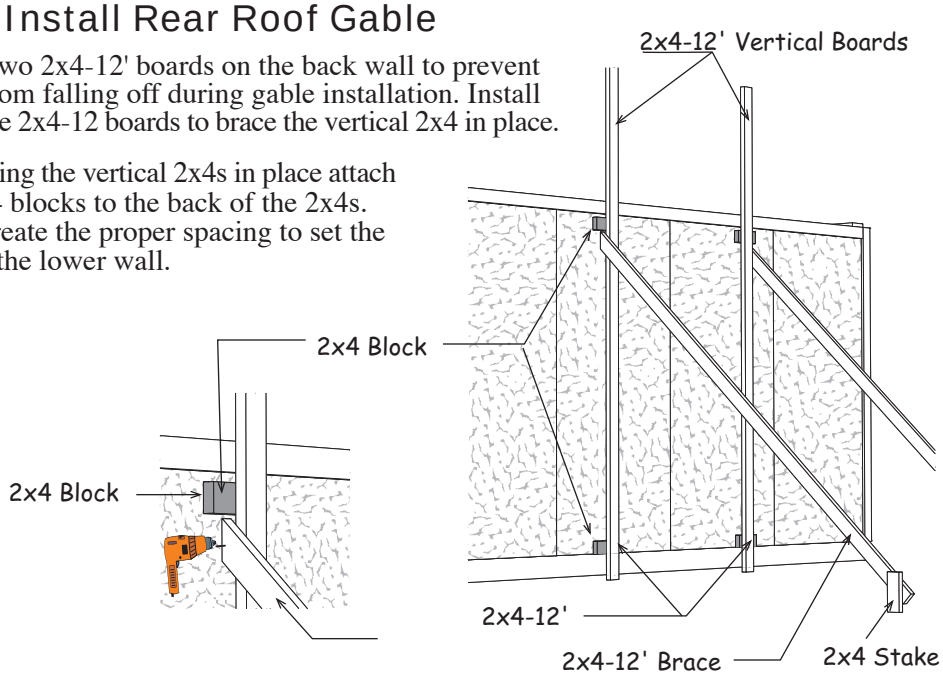

2. Erect the gable on back wall. Be cautious and ensure gable siding extends over trim on back wall. Center gable with bottom 2x4 extending 1-1/2" past lower wall 2x4s on both sides. Nail to floor using 10d sinkers.
3. Remove the wall braces from interior walls and use them to brace the gable to the loft floor.

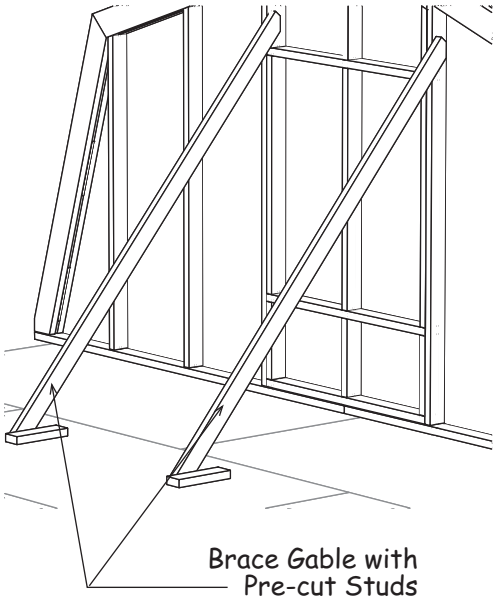

4. Nail bottom edge of siding to 1x4 trim with 8d galvanized box nails.

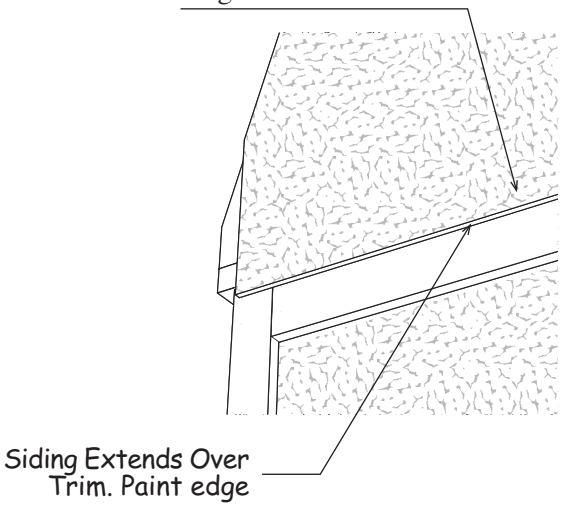

Step 17 Assemble & Install Front Gable

1. Repeat **Step 13** to assemble front gable. If you are installing a window cut pre-cut wall studs to frame in the window opening.
2. Stand up the gable frame and slide it to the front of the building. Position the frame with the bottom towards the front wall so it can be erected after the siding is applied.
3. Repeat **Step 14** to apply gable siding.

4. Remove the 2x4-12' boards used for bracing on back gable and repeat **Step 16** to install the front gable. Do not remove 2x4 blocks from floor. They will be used to assemble trusses.

Step 18 Install 2x6 Truss Plates

1. Install (3) three 2x6-7' and cut to fit (1) one 2x6-8' as truss plates between the front and rear gable wall panels along one side wall. The 2x6 plates should project 1-1/2" past the 2x4 tie plate (see Detail 'A'). Nail 2x6s to the floor with 10d coated sinker nails; double row spaced 4" apart. Repeat on opposite side wall using cut off 2x6 to finish.
2. Starting at the rear gable indicate with 'X' marks where the trusses will be located. The last space will be wider than the first (19-3/8") space.

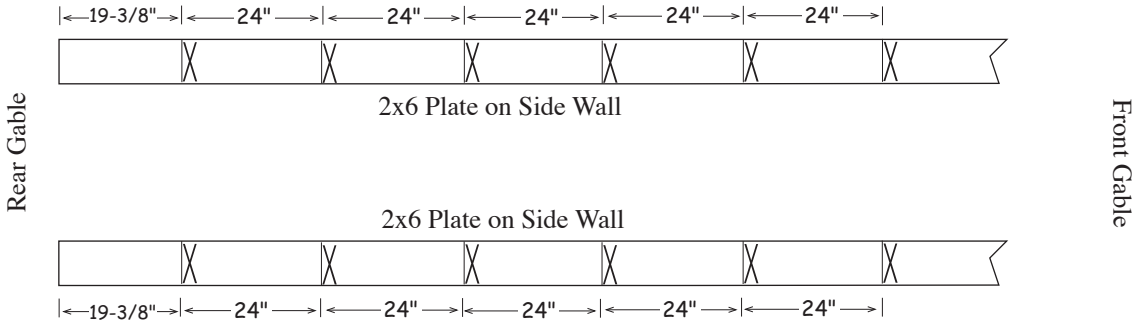

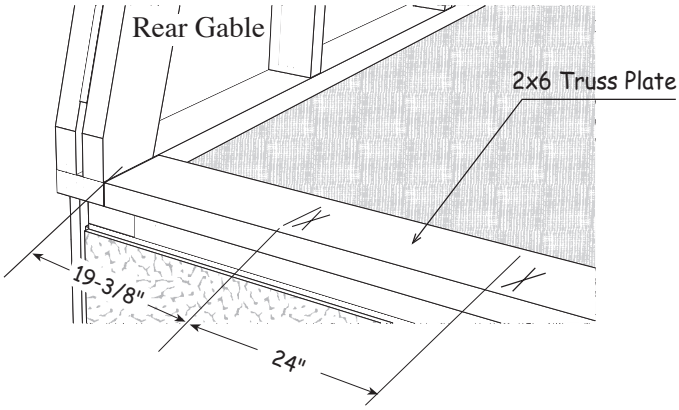

Detail 'A'

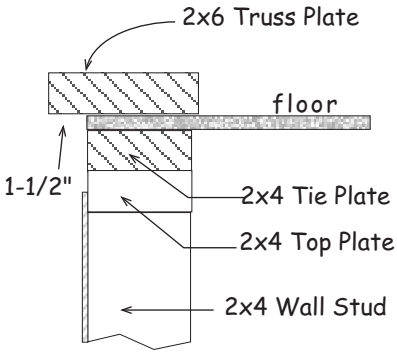

Step 19 Install 2x6 Soffit Blocks

1. Locate pre-built 2x6 soffit blocks, (4) Four will have siding attached. Starting from back wall position a soffit block with attached siding under bottom plate of gable and flush with face of gable siding. Secure to wall using (2) two 3" deck screws.
2. Install soffit blocks down the length of the wall under the center of each 'X" on truss plate. Every other soffit block will not have a stud to screw too. Secure these by screwing through top of truss plate at an angle and another at an angle into wall plate.
3. Install last block with attached siding flush with face of front gable siding.
4. Repeat on opposite wall.

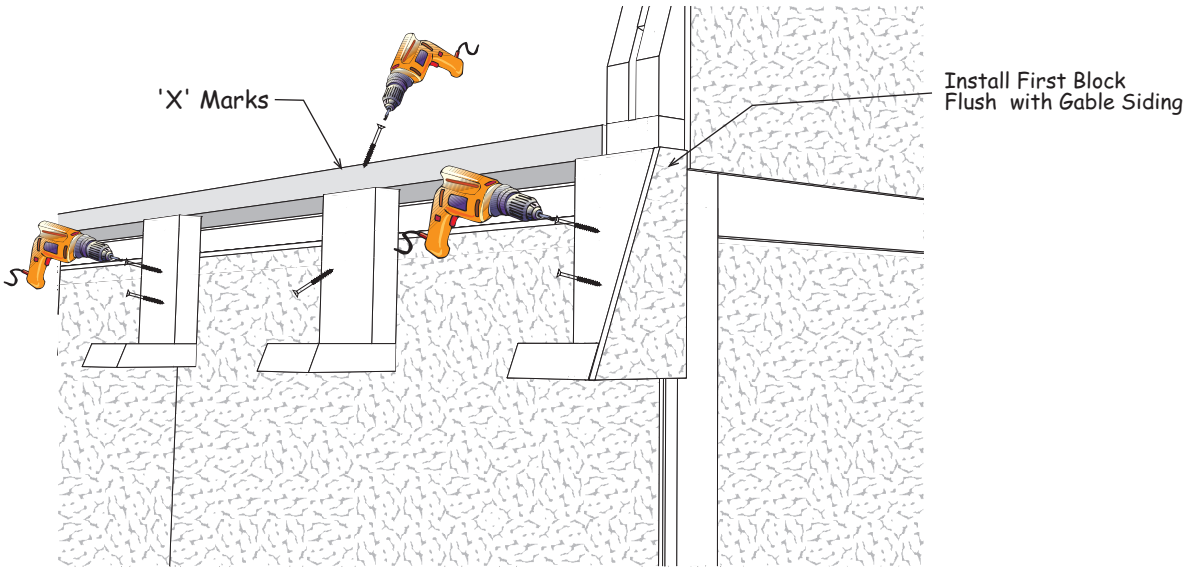

Step 20 Assemble Roof Trusses

1. Lay truss parts inside the 2x4 blocks used around gable frames. One end of the 81-3/4" long 2x6 boards have a blue mark. Place these ends together at the ridge. Add a 2x4 block at the bottom of the truss legs to keep this 2x6 from moving.
2. Secure the 2x6 boards together using pre-cut gussets. Knee gussets are 30" wide. Ridge gusset is 31-3/4" wide. Take the gussets and the 2x6 boards and secure gussets with (3) three rows of 6d common nails spaced 6" apart. **Important**; when installing the gusset at the knee, install gusset with the shortest angled side towards the ridge. *See detail at bottom of page.*
3. Turn truss over and apply gussets to the other side. Set truss aside.
4. Assemble (10) ten more trusses. Remove 2x4 blocks from floor.

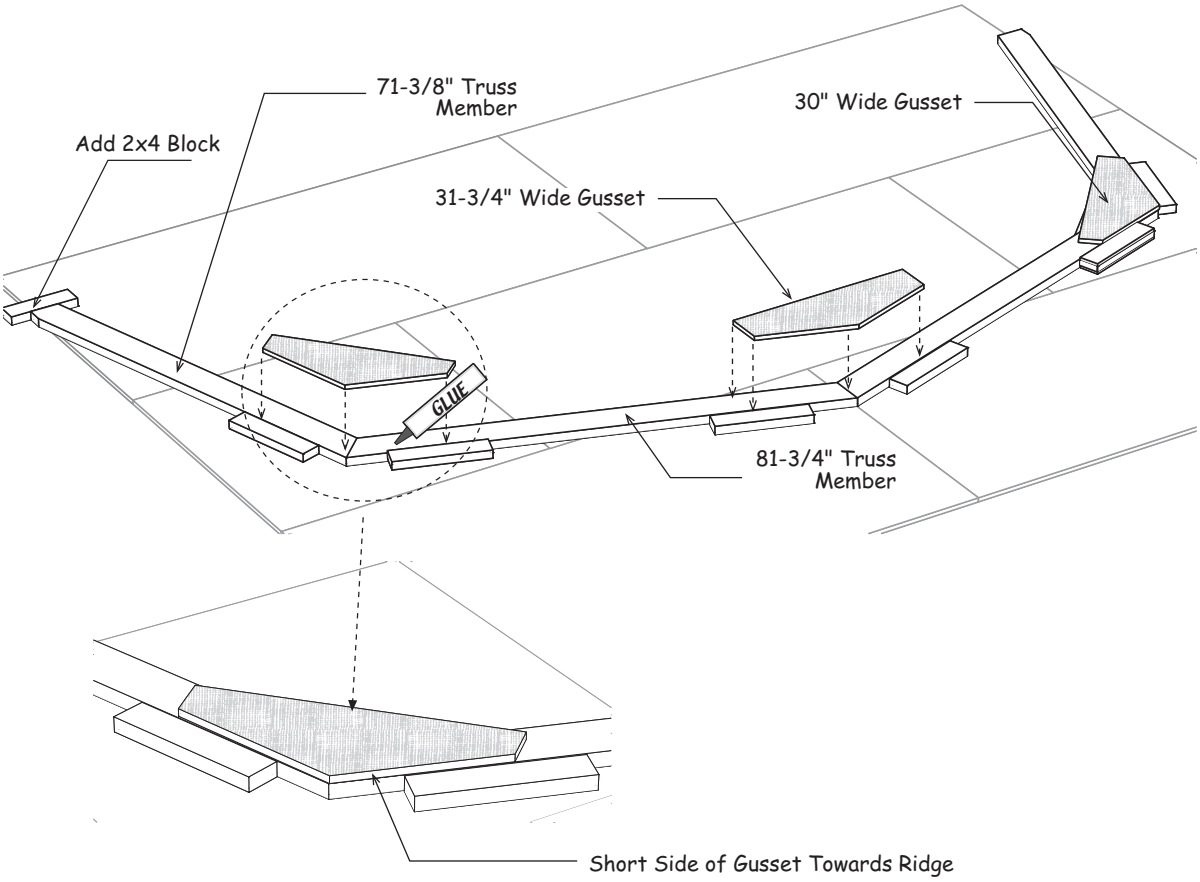

Step 21 Install Roof Trusses

1. Install 2x6 hangers over the 'X' marks on the truss plate and flush with outside edge of 2x6. Use 1-1/2" joist hanger nails. Set truss legs into hanger. Use 10d coated sinker nails to secure the truss to the metal hanger (use hanger eyelets to guide the nails at the correct angle).

2. Remove the 2x4-12' boards used to brace the front gable. As you progress setting trusses tack these boards to keep trusses plumb. Don't remove the 2x4s until the roof sheathing is applied.

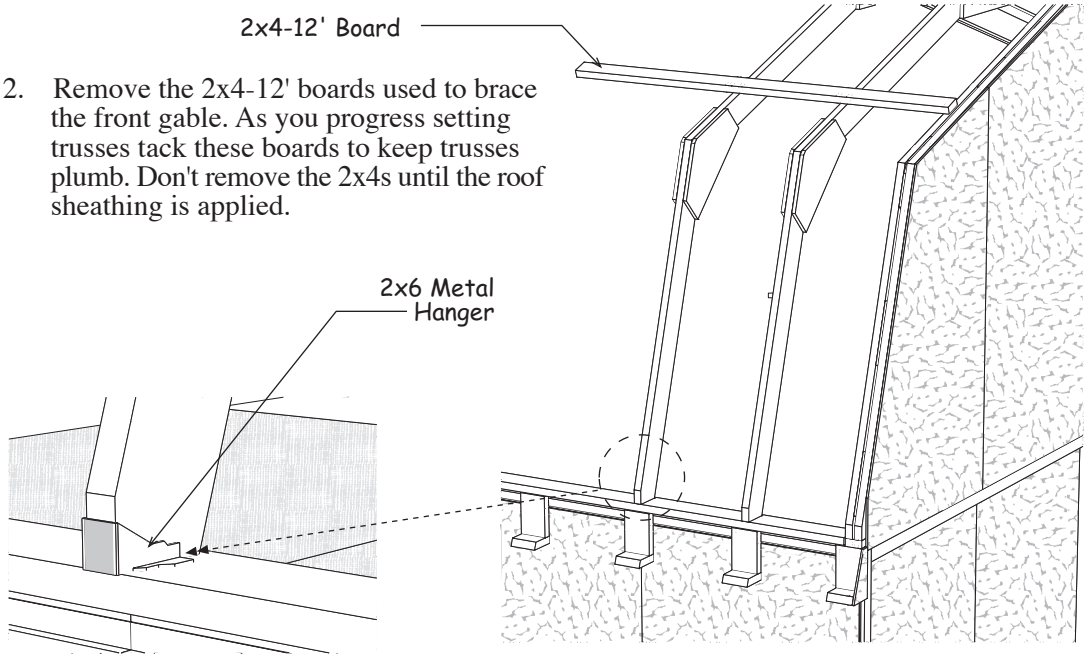

Step 22 Install Soffit

1. Gather (8) eight 5-1/4" x 48-3/4" primed soffit panels. Select (1) one soffit panel and measure from 'Tongue' edge and cut to a length of 26". Install primed side down with cut edge flush with face of siding on first soffit block. Secure to each block using (2) two 1-1/4" stainless trim screws.
2. Install full length soffit panels along the side wall. Cut the last soffit panel flush with the outside of last soffit block.
3. Install soffit panels on the opposite wall.

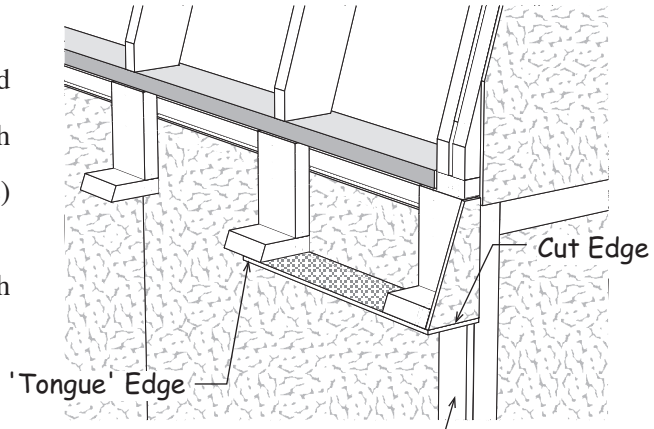

4. Install 1x4 corner trim under soffit on side walls flush with front and back wall trim. Cut 1x4-8' trim boards flush with the bottom of the siding.

Step 23 Install Front Gable Soffit

1. Install 81-3/4" long 2x4s on the top of the front gable, flush with the top of the gable frame. Install the ends with the blue mark together at the peak of the gable. Use 10d sinkers spaced 12" apart.
2. Install 82-5/8" long 2x4s on the side of the front gable, flush with the side of the gable frame.
3. Install (2) two 8" wide x 48-3/4" soffit panels under the 2x4s with primed side down and the 'LAP' edges together at the knee of the gable. Use 1-1/4" stainless trim screws spaced 12" apart.

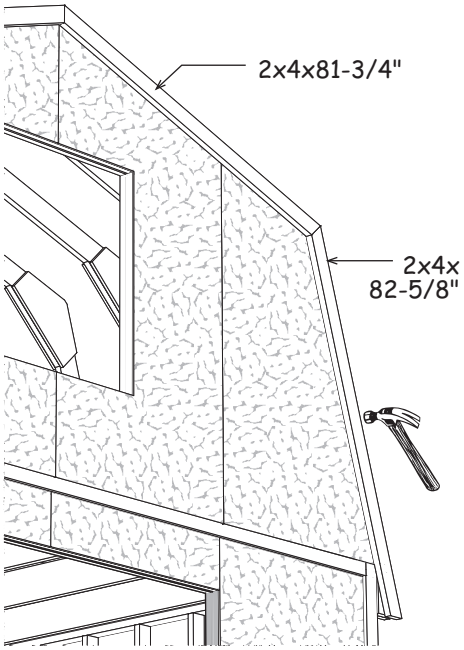

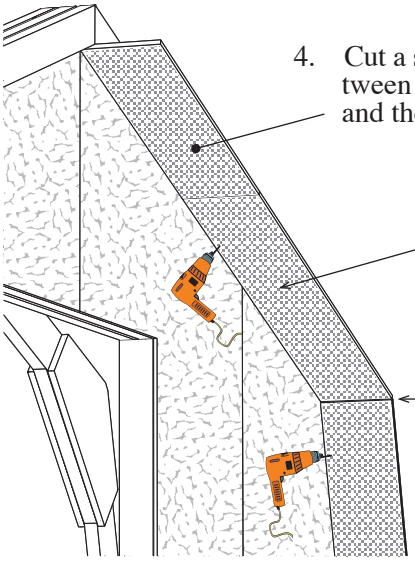

4. Cut a soffit panel to fit between the top soffit panel and the peak.

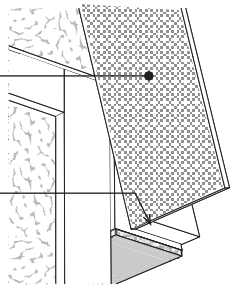

5. Cut a soffit panel to fit flush with the bottom 2x4.

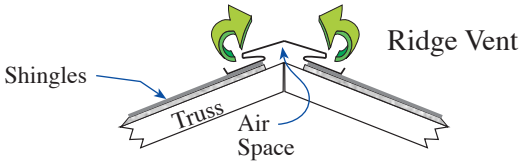

Step 24A Install Roof Sheathing

1. Make certain the trusses and the gables are plumb. If you are installing a ridge vent, cut the top row of roof sheathing 1" below the peak of the truss to allow air circulation through the ridge vent. *See detail above.* Install sheathing using 7d coated sinker nails spaced 9" apart.

Step 24B Install Roof Sheathing continued

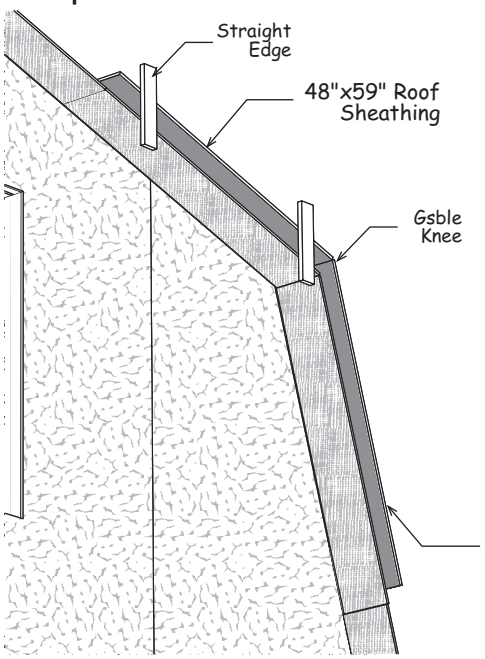

2. Cut (2) two 48"x96" OSB sheets in half to make (4) four 48"x48" sheets. Re-cut one to 36"x48".
3. Starting at gable knee install roof sheathing at the front of the building, *refer to the sheathing layout below*. Using a straight edge position the first sheets plumb with the soffit panels. The roof sheathing should meet at center of the trusses.
4. Cut OSB flush with back gable siding.
5. Cut the bottom row of sheathing to a width of 36" per layout.
6. Cut top row of sheathing to fit. Or, cut 1" narrower to allow for venting. Install (1) one plyclip between each truss for this row.
7. Repeat on opposite side of building.

Upper sheathing should rest on lower sheathing

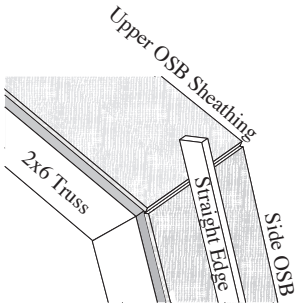

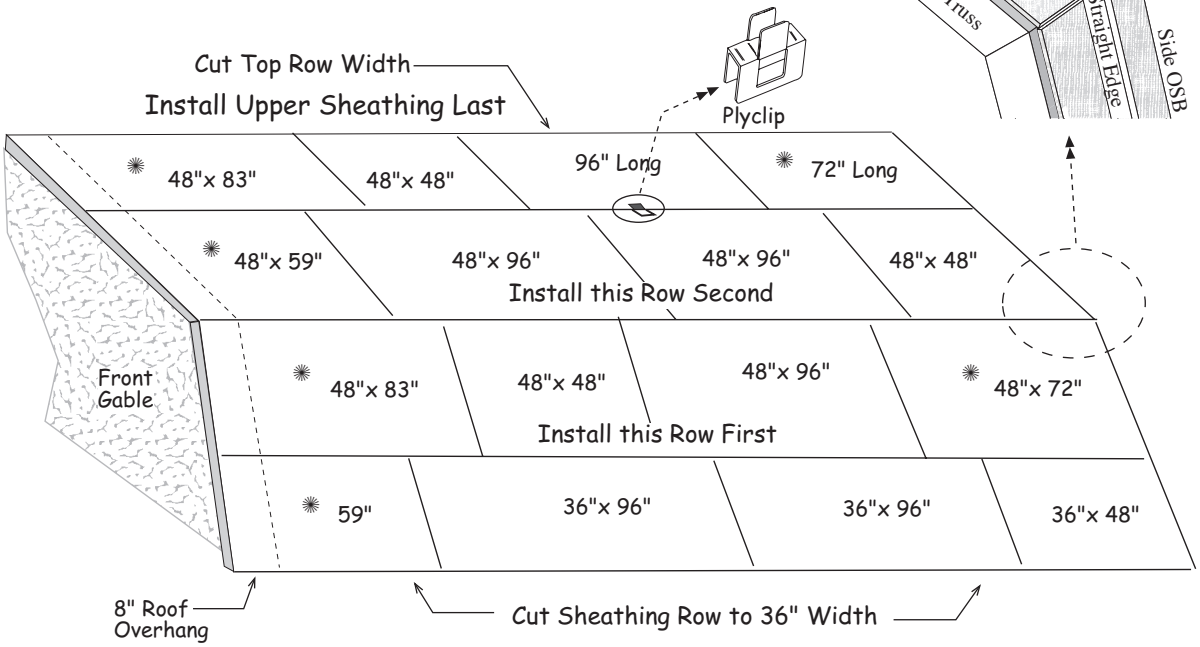

✺ 48" Wide Sheathing packed in Pallets

Step 25A Install Front Gable Trim

1. Insert a 81-3/4" long 2x4 between the soffit panels and the roof sheathing on the upper gable. Use 1-1/4" trim screws to secure the soffit panels to the 2x4s. Use 7d sinkers to secure the roof sheathing to the 2x4s.
2. Insert and secure 82-5/8" long 2x4s between the soffit panels and the roof sheathing on the side of the gable.

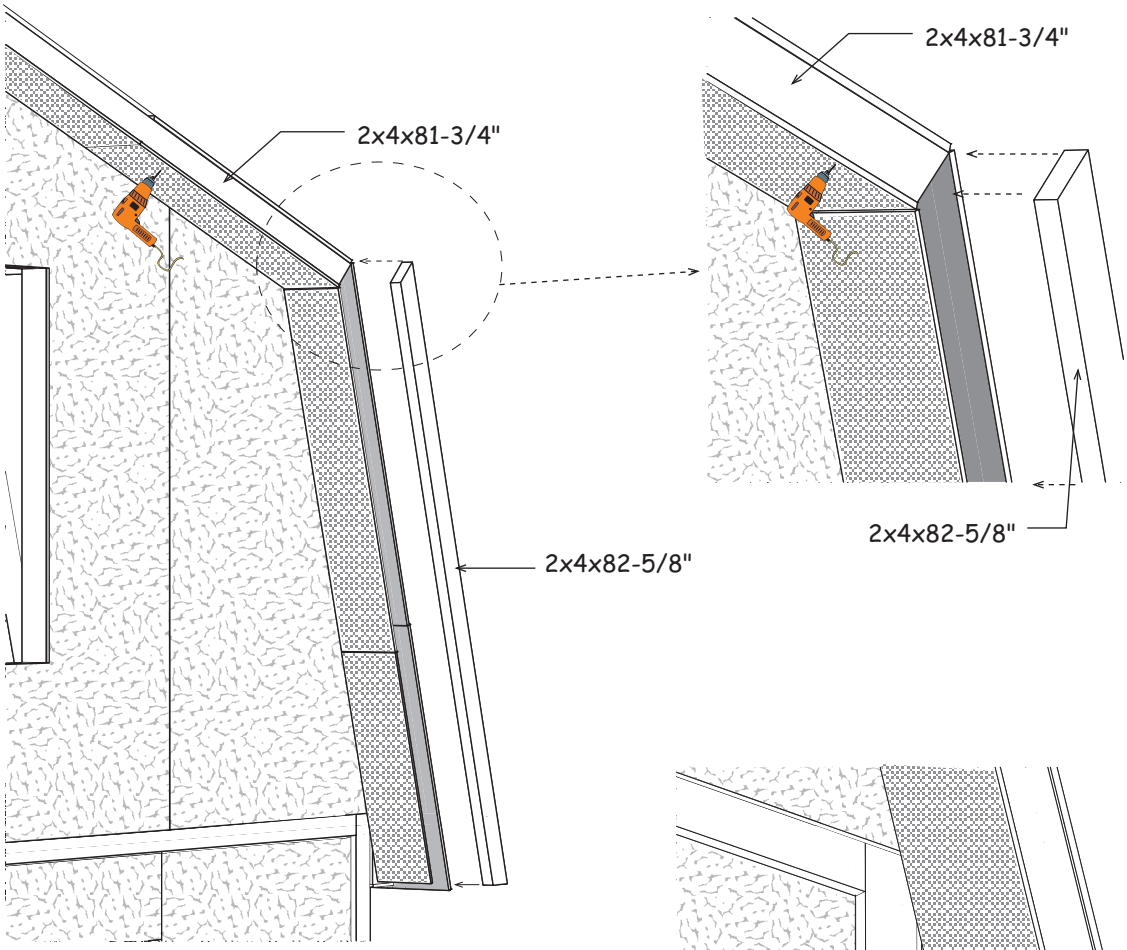

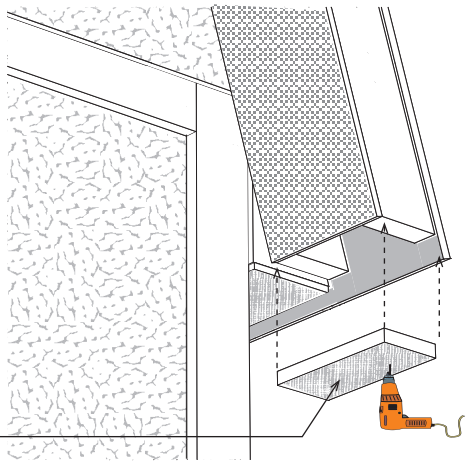

3. Install a 3-1/2" x 8" trim board to the bottom of the 2x4s using 1-1/4" trim screws.

Step 25B Install Front Gable Trim continued

4. Install 82-1/4" long 1x6 trim boards at the top of the gable. Install the end with the blue marking at the ridge. Install 1x6 flush with the top of the roof sheathing. Use 8d galv. nails.

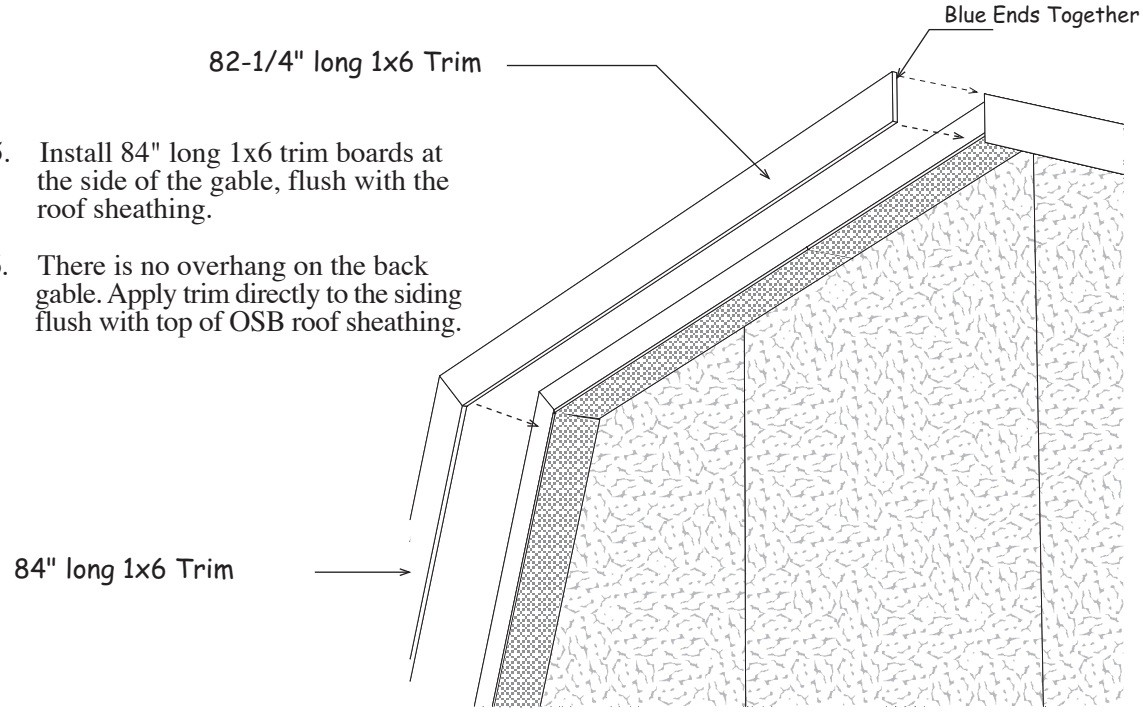

5. Install 84" long 1x6 trim boards at the side of the gable, flush with the roof sheathing.

6. There is no overhang on the back gable. Apply trim directly to the siding flush with top of OSB roof sheathing.

Step 26 Install Back Gable Trim

There is no overhang on the back gable. Apply trim directly to the siding flush with top of OSB roof sheathing.

Install Roofing — Not Supplied in Kit

Install metal roof 'drip' edging along the perimeter of the roof. Install shingles according to the instructions on the wrapper.

Optional Roof Covering		
22	bdl.	Roof Shingles
12	pcs.	Roof 'drip' Edge-10'
800	sq. ft.	Felt Paper

Packing List Richmond 16' Wide x 24' Building Kit

Qty.	*Material Shipped by Local Supplier*		
72	2x4	-	Pre-cut Wall Studs
8	2x4	8'	Wall Plates (treated)
1	2x4	16'	Wall plates (treated)
8	2x4	8'	Framing Lumber
4	2x4	10'	Framing Lumber
8	2x4	12'	Framing Lumber
3	2x4	16'	Framing Lumber
1	2x6	8'	Framing Lumber
8	1x4	8'	Trim Boards
4	1x4	10'	Trim Boards
2	2x8	10'	Door Header
12	4x8	3/4"	T&G Loft Flooring
24	4x8	3/8"	LP Primed Siding
16	4x8	7/16"	OSB Sheathing

Material Shipped by Local Supplier			
Qty.	*Without Stair Kit*		
2	2x10	8'	Floor Joist Headers
19	2x10	16'	Floor Joist & Headers
Qty.	*With Optional Stair Kit*		
3	2x10	8'	Floor Joist & Headers
5	2x10	12'	Floor Joist & Headers
13	2x10	16'	Floor Joists
19	2x4	-	Pre-cut (Additional)
2	2x4	8'	Treated (Additional)

Qty.	*Material in 4' Extension Kit*	
4 ea.	2x6 x 81-3/4"	Truss Top Cord
4 ea.	2x6 x 71-3/8"	Truss Leg
4 ea.	2x6 x 10"	Truss Soffit Blocks
4 ea.	10-1/2" x 31-3/4"	Truss Gusset
8 ea.	11-3/4" x 30"	Truss Gusset
2 ea.	5-1/4" x 48"	Primed Soffit Panels
4 ea.	2x6	Metal Hangers
6 ea.	2x10	Metal Hangers
1 lb	6d common and 10d sinker nails	

Packing List — Richmond 16' Wide x 24' Building Kit

Qty.	Material Shipped on 'A' Pallet			
2	Pre-built Gable Frames	21-3/4"	x	48"
2	Pre-built Gable Frames	19-1/4"	x	48"
26	Truss - Legs	2x6	x	71-3/8"
6	Truss Plates	2x6	x	84"
4	Gable Overhang	2x4	x	82-5/8"
4	Gable Wall Studs	2x4	x	80-1/2"
4	Gable Wall Studs	2x4	x	72-5/8"
1	Gable Wall Studs	2x4	x	64-1/2"
6	Gable Wall Framing	2x4	x	47-3/4"
2	Front Gable Overhang Trim	1x4	x	8"
18	Soffit Blocks	2x6	x	10"
4	Soffit Blocks w/Siding	2x6	x	10"
3	7/16" OSB Sheathing	48"	x	83"
2	7/16" OSB Sheathing	48"	x	72"
4	7/16" OSB Sheathing	48"	x	59"
1	OSB Header Fillers	23-3/4"	x	48"
4	Truss Gussts	11-3/4"	x	30"
18	1/2" OSB Gable Fillers	(see detail below)		
8	LP 3/8" Siding Fillers	1-1/2"	x	48-3/4"

Qty.	Material Shipped on 'B' Pallet			
26	Truss - Top Cord	2x6	x	81-3/4"
4	Gable Overhang	2x4	x	81-3/4"
3	Gable Wall Studs	2x4	x	64-1/2"
4	Gable Trim	1x6	x	84"
4	Gable Trim	1x6	x	82-1/4"
4	LP Siding Panels	80-1/2"	x	48-3/4"
2	LP Siding Panels	14-1/2"	x	48-3/4"
14	LP Primed Soffit Panels	5-1/4"	x	48-3/4"
8	LP Primed Soffit Panels	8"	x	48-3/4"
1	7/16" OSB Sheathing	48"	x	83"
2	7/16" OSB Sheathing	48"	x	72"
18	Truss Gussts	10-1/2"	x	31-3/4"
32	Truss Gussts	11-3/4"	x	30"

1/2" OSB Gable Fillers	
2 Ridge	4 Knee
12 Straight	

Qty.	Hardware Breakdown 'A' Pallet		
5	lbs.	16d	Galvanized Spiral Nails
10	lbs.	10d	Coated Sinkers
15	lbs.	8d	Galvanized Nails
7	lbs.	8d	Galvanized Spiral Nails
6	lbs.	7d	Coated Sinkers
13	lbs.	6d	Common Nails
6	lb.	1-1/2"	Hanger Nails
150	1-5/8"	Stainless Soffit Screws w/bit	
75	2-1/2"	Wood Screws	
100	3"	Wood Screws	
18	2x6	Joist Hangers	
28	2x10	Joist Hangers	
40	7/16"	Plyclips for roof sheathing	